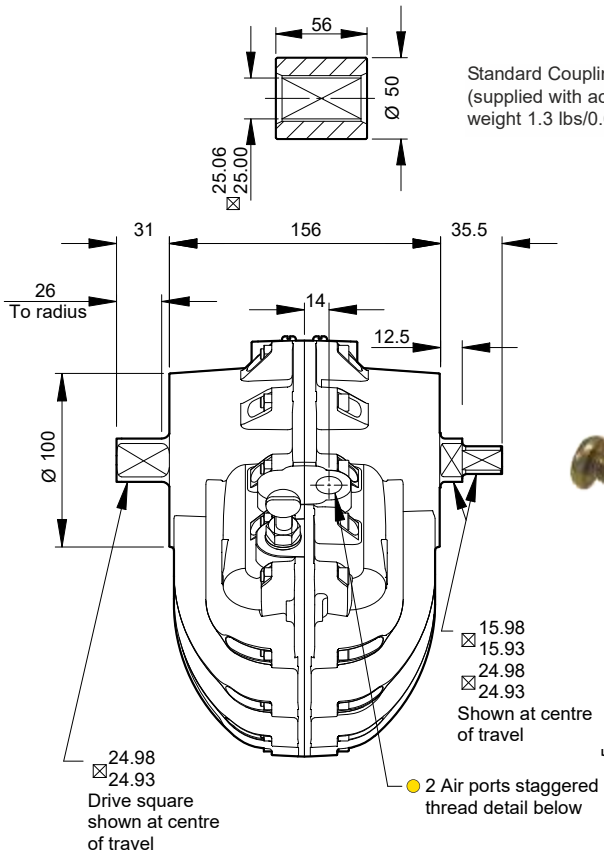

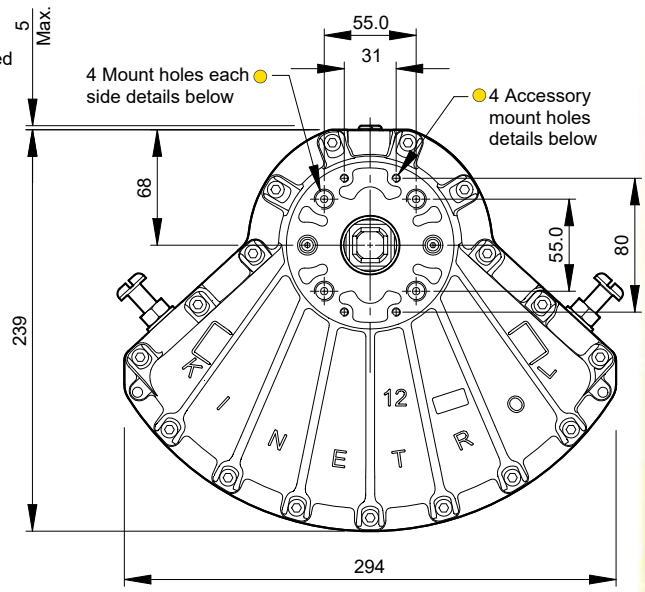

Air Port/Mount Hole Details

Model	Air Ports	Mount Holes & Accessory Mount Holes
124-100	$G^3/_8$	4 x M12 x 24 deep on 77.8 PCD 4 x M5 x 10 deep
127-100	$^3/_8$ NPT	4 x $^1/_2$ - 13 UNC x 0.94" deep on 3.06" PCD 4 x 10-24 x 3/8" deep

Visual Red Indicator supplied as standard - see page 3

Specification

Output Torque

5000 lbf ins/575 Nm at 100 psi/7 bar

Angle of Travel (adjustable)

80° - 102° (restricted travel versions available)

Displaced Volume

86 in³/1410 cm³

Finish

Epoxy stove enamel

Weight

14.8 lb/6.7 kg (excluding coupling)

For further information see General Specification on page 5.

Options

- **Fail safe spring return units - clockwise or counter clockwise see pages 27-29**
- **Limit switch boxes for open/close indication - various switches for hazardous areas see pages 31-34**
- **Integral solenoid valve see page 38**
- **AP pneumatic positioner - full range of options see pages 41/42**
- **EL electropneumatic positioner - full range of options see pages 39/40**
- **P3 on/off positioner - full range of options including hazardous area see pages 43-45**
- **180° model see page 51/52**
- **Female drive and mounting details to DIN 3337 and ISO 5211 see pages 57/58**
- **Spring to centre see page 50**
- **Geared manual override see page 55**
- **Code identification see page 30**
- **Torque outputs see pages 6-8**
- **See pages 57-60 for English dimensions and dimensions of spring options**
- **Accessory mount plate for positioners, switch boxes and clear cone monitor. See TD149.**
- **High Temperature / Low temperature options see page 5**

ATEX CATEGORY 2 APPROVED